18 24

HS FRENCH FLINT

THE GLASS CONTAINER SPECIALISTS

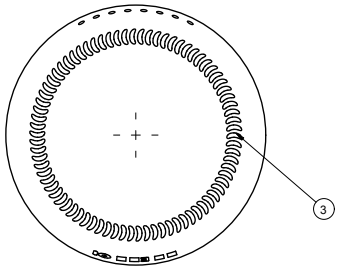

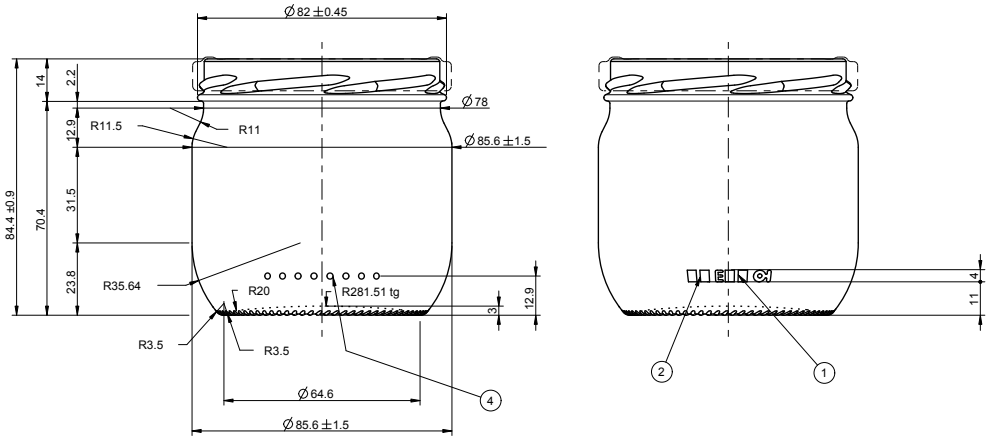

370ML GLASS FOOD JAR

Product code	FOOD370B
Finish	82mm Twist-off
Capacity	370ml
Brim-full capacity	370ml